GUIDE 2 OF 6

Know Your Machine: axes, zero and which way is which

Nearly every beginner mishap comes from a mix-up about directions or zero points. Ten minutes with this guide, standing in front of your machine, saves broken bits and ruined boards later.

IN THIS GUIDE

- The three axes and which way is plus
- Machine zero and work zero: two different things
- Where X0 Y0 goes on your board (the XY datum)
- Z zero: top of the board or the bed
- The matching rule: Job Setup must agree with what you do at the machine
- Homing switches and alarms

YOU WILL NEED

- Your machine in front of you, switched off is fine
- Nothing else. There is nothing to set up yet.

WORDS YOU WILL MEET

Axis: one direction the machine can move. **Zero**: the place an axis counts from. **Datum**: the point on the board the job is measured from. **Homing**: the machine finding its own zero with switches.

The three axes

Stand at the front of the machine, where you would load a board. Everything in Carvio and in the G-code is described from this spot.

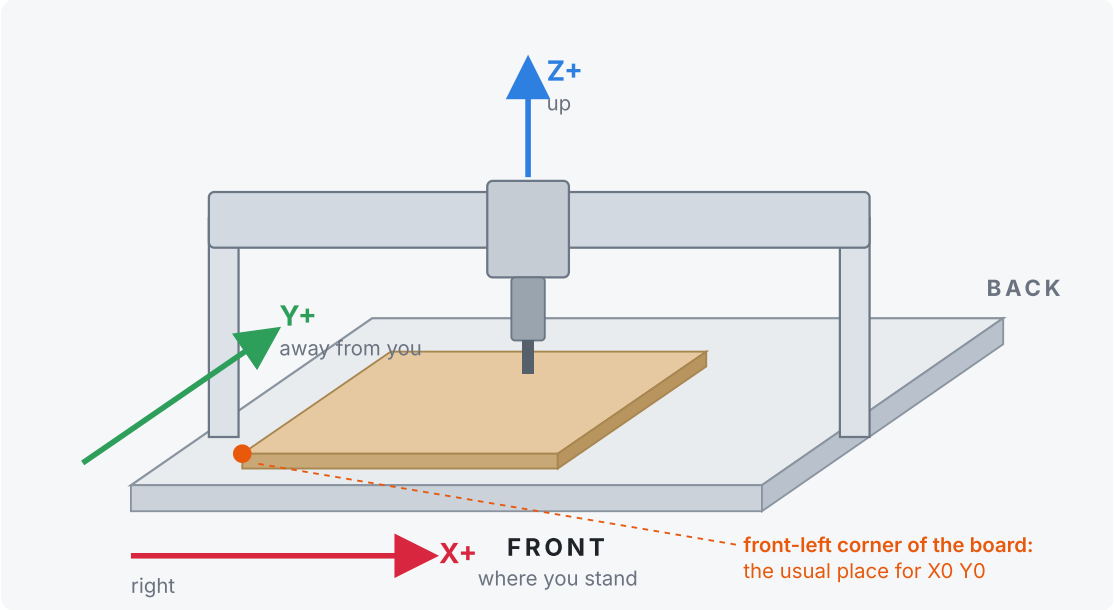

The three axes, seen from the front of the machine. The tool moves along X, Y and Z.

Axis	Plus (+) direction	What that looks like on your machine
X	To the **right**	The spindle moves along the gantry towards the right-hand side.
Y	**Away** from you, towards the back	On most routers the gantry rolls away from you. On a "moving bed" machine the bed comes *towards* you instead, which is the same thing: the tool ends up further back *relative to the board*.
Z	**Up**	The spindle rises away from the board. Z minus is down, into the wood.

The right-hand rule

Hold your right hand flat, palm up, fingers pointing away from you. Your thumb points along X+, your fingers along Y+, and your palm faces Z+. Carvio's 2D view is the same picture seen from above: X runs left to right, Y runs bottom to top.

⚠ If an axis moves the wrong way

If you press **X+** on the Machine tab (Guide 5) and the spindle goes left, or **Z+** and it goes down, the controller's direction setting is backwards for that axis. Do not get used to it: fix it once, in the controller. In Carvio choose **Machine > Controller Settings ($$)...** while connected, find **$3 Direction invert**, change it for that axis only, and click **Apply changes**. Export a backup of the settings first. Your machine's own manual tells you which value to use.

Two kinds of zero

A CNC counts positions from a zero point, and there are two of them. Keeping them apart in your head is half of CNC.

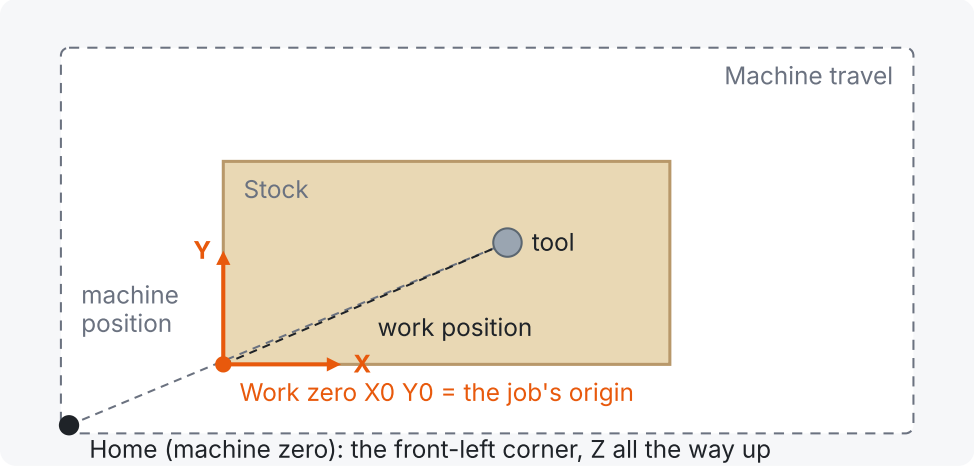

Machine zero sits at the home switches: here the front-left corner, with Z all the way up. Work zero is wherever you put it on the board.

Machine zero (home)

The machine's own fixed zero, found by driving each axis to its **homing switch**. It never moves. On the Machine tab it is shown by the small grey numbers, the **machine position**. You never cut from it directly.

Work zero (your job's zero)

The point on **your board** that Carvio calls X0 Y0 Z0. You set it yourself for every job, by jogging the tool there and pressing the zero buttons. The large numbers on the Machine tab, the **work position**, count from it. Every toolpath is measured from here.

Grbl keeps the work zero as an offset from machine zero, so on a homed machine a work zero you set yesterday is still in the same place today. Without homing switches the machine forgets where it is every time it is switched off, and you set the work zero again.

Where X0 Y0 goes on your board: the XY datum

When you set up a job (Guide 6), Carvio asks for the **XY Datum Position**: which point of the board is X0 Y0. Then, at the machine, you put the tool on that same point of the real board and press **Zero XY**.

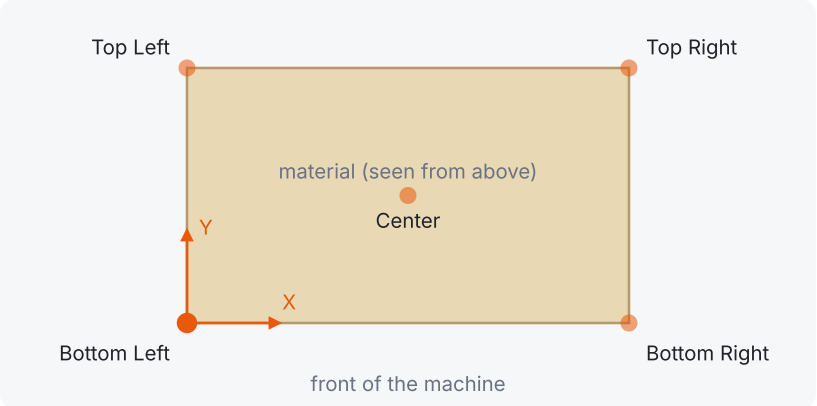

The five choices, seen from above with the front of the machine at the bottom.

Bottom Left is the choice for nearly everyone: the front-left corner of the board. The whole job then lies in plus X and plus Y, the numbers are easy to read, and the corner is easy to find with a touch plate or by eye.

Center is handy for round or symmetric things, or when you place a board by its middle. The other corners are for special fixtures.

> **Pick one and stick to it**
>
> Use Bottom Left for all your early jobs. The fewer things that change between jobs, the fewer things can go wrong.

Z zero: the top of the board or the bed?

Z zero is the height the machine calls Z 0. The **Z Zero Position** in Job Setup has two choices, and it must match where you set Z zero on the real machine.

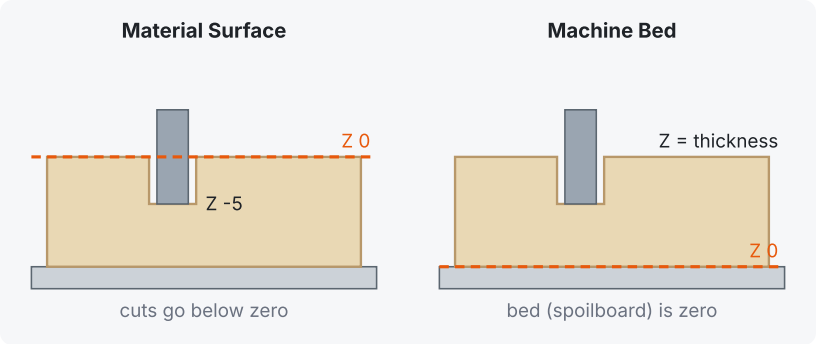

Left: Z 0 on the top of the board, cuts go to minus Z. Right: Z 0 on the bed, the top of the board is at Z = thickness.

Material Surface (the top of the board) is the choice for nearly all jobs. Touch the tool to the top of the board and zero Z there. Every depth is then right however thick the board really is. Use this one.

Machine Bed puts Z 0 on the bed or spoilboard under the board. A cut right through always ends at the same height, which suits sheet goods of uneven thickness, but it needs the thickness typed exactly right. Leave it for later.

> **Safe Z is measured from Z zero**
>
> Carvio lifts the tool to the **Safe Z** height between cuts. With Z zero on the top of the board, a Safe Z of 5 mm is 5 mm above the wood. With Z zero on the bed, 5 mm would be *inside* an 18 mm board. Carvio warns you, but it is one more reason to start with Material Surface.

The matching rule

This is the rule that every beginner guide comes back to. The settings in Carvio describe the board; what you do at the machine must describe the same board the same way.

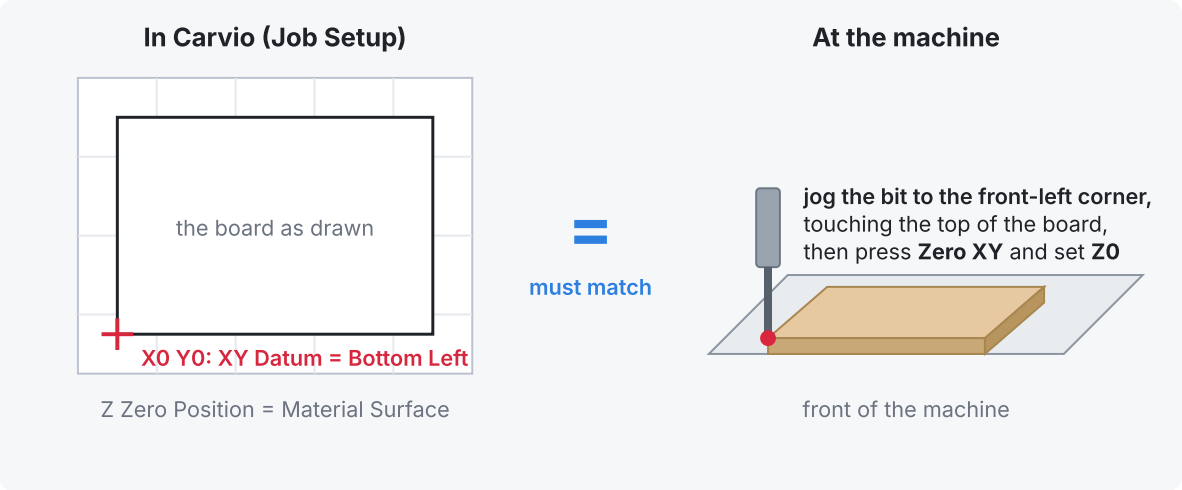

What Job Setup says on the left must be what you do on the right.

In Job Setup (Guide 6)	At the machine (Guide 5)
XY Datum Position = **Bottom Left**	Jog the tool over the **front-left corner** of the board, then **Zero XY**.
XY Datum Position = **Center**	Jog the tool over the **middle** of the board, then **Zero XY**.
Z Zero Position = **Material Surface**	Touch the tip to the **top of the board** (paper method or touch plate), then **Z0**.
Z Zero Position = **Machine Bed**	Touch the tip to the **bed or spoilboard** beside the board, then **Z0**.
Width 200, Height 120, Thickness 18	The real board is at least 200 × 120, and really is 18 thick (measure it: a "3/4 inch" board is often 18 mm).

When they do not match

The job is cut in the wrong place, off the edge of the board, too deep, or into the bed. Before every job, ask: where did I put X0 Y0, and where is Z0? Then check Job Setup says the same.

Homing switches and alarms

Homing drives each axis slowly to its limit switch and backs off a little. Afterwards the machine knows exactly where it is, and Carvio can warn you when a job would run off the end of the travel. If your machine has switches, home it every time you switch it on. In Carvio that is the **Home** button on the Machine tab (**Machine > Home ($H)**).

What an alarm is

An **Alarm** is the controller refusing to move until you deal with something: it was just switched on and must be homed, a limit switch was hit, a probe

Getting out of it

- **Home** if you have switches: it clears the alarm and gives the machine a known position.

found nothing, or it was reset while moving. The Machine tab shows a red **Alarm** badge and says why.

- **Unlock $X** if you have no switches: it clears the alarm, but the machine does not know where it is, so jog carefully.

> **No homing switches?**
> Many small machines have none. That is fine for starting out: skip homing, press **Unlock** if the machine is in alarm, and set your work zero by hand every time. Carvio cannot check the job against the travel then, so leave room at the edges.

Reading the Machine tab

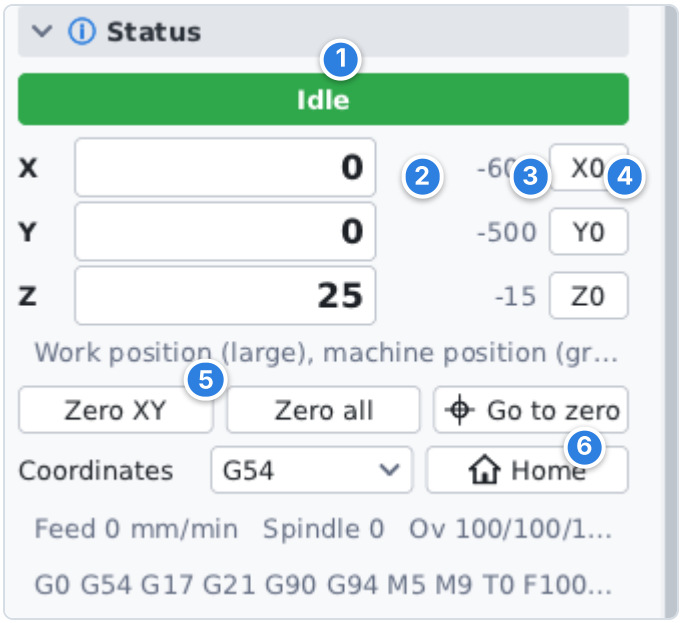

The Status section of the Machine tab while connected (here to the demo machine).

1. The **state**: Idle (ready), Jog, Run, Hold, Alarm, Home.
2. The **work position**, counted from your work zero. These are the numbers that matter while you cut.
3. The **machine position** in grey, counted from machine zero.
4. **X0**, **Y0**, **Z0**: make the tool's current place the work zero for that one axis.
5. **Zero XY**, **Zero all** and **Go to zero** (which first rises to a safe height).
6. **Home** runs the homing cycle. **Coordinates** is the work coordinate system; leave it on G54.

⚠ If something goes wrong

What you see	What it usually means
An axis moves the opposite way to the button	The controller's direction setting is reversed for that axis: **$3** in **Machine > Controller Settings**. Fix it once in the controller, not by remembering.
Alarm as soon as the machine is switched on	Normal on a machine with homing switched on: it wants to be homed. Click **Home**.
Alarm after a bang or a buzz at the end of travel	A hard limit, or the machine was driven into its end stop. Clear the alarm, then jog away from the end. Home again if you can.

Homing runs the wrong way, or never finds the switch	The homing direction (**$23**) or the switch wiring is wrong. Your machine's manual has the right values; check them before homing again.
The work position says 0 but the tool is nowhere near the board	The work zero was set somewhere else, or the machine lost its place after being switched off. Set the zero again on the board.
Grey machine position numbers never change	They only mean something after homing. Without switches, ignore them and use the work position.

Next: Guide 3, Set Up Your Machine in Carvio: the machine profile, port and controller.

The Carvio Beginner Guides: 1 Start Here · 2 Know Your Machine · 3 Set Up Your Machine in Carvio · 4 Set Up Your Tools · 5 Connect, Jog, Home and Set Zero · 6 Your First Job and Test Cuts